Resonant Mode Damping Phase Scratch Pad

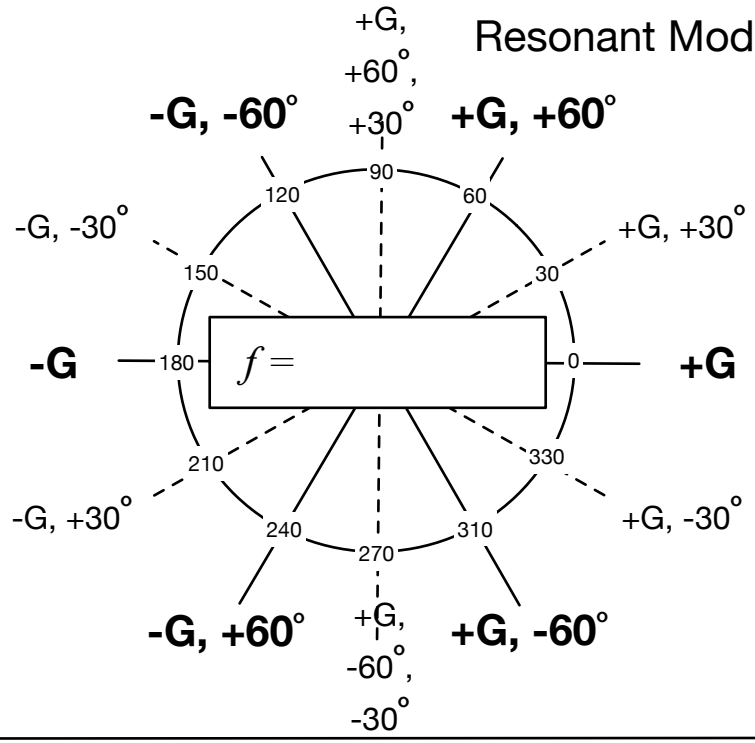

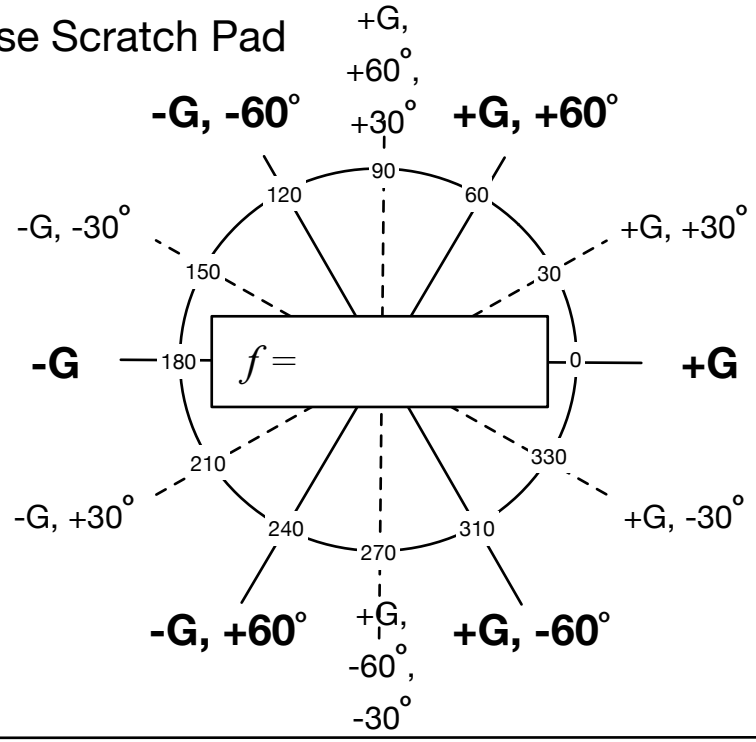

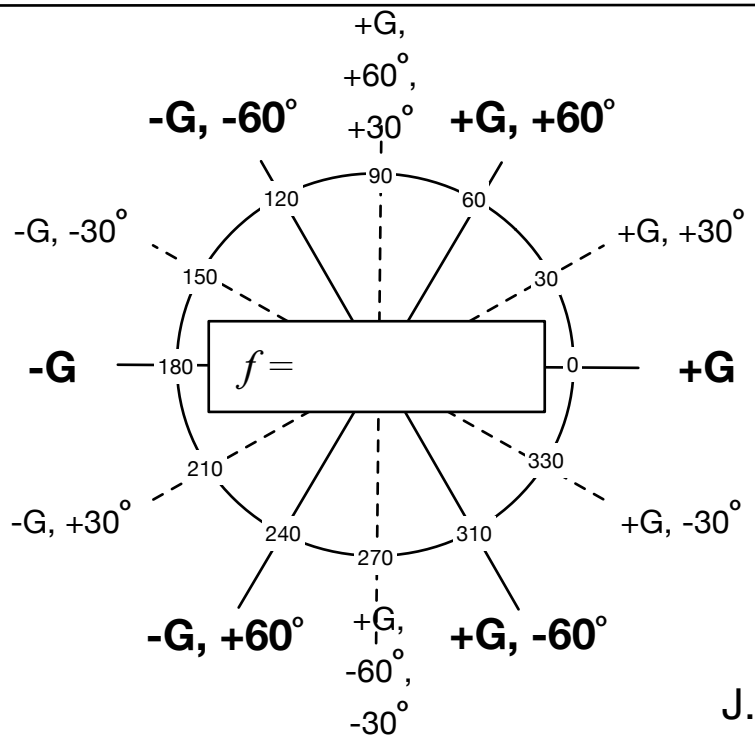

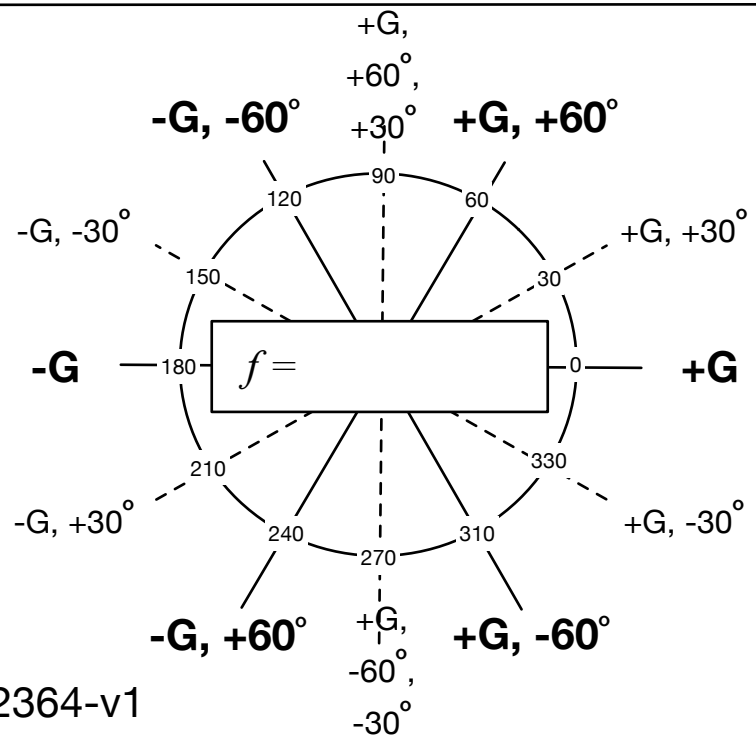

J. Kissel | G1602364-v1