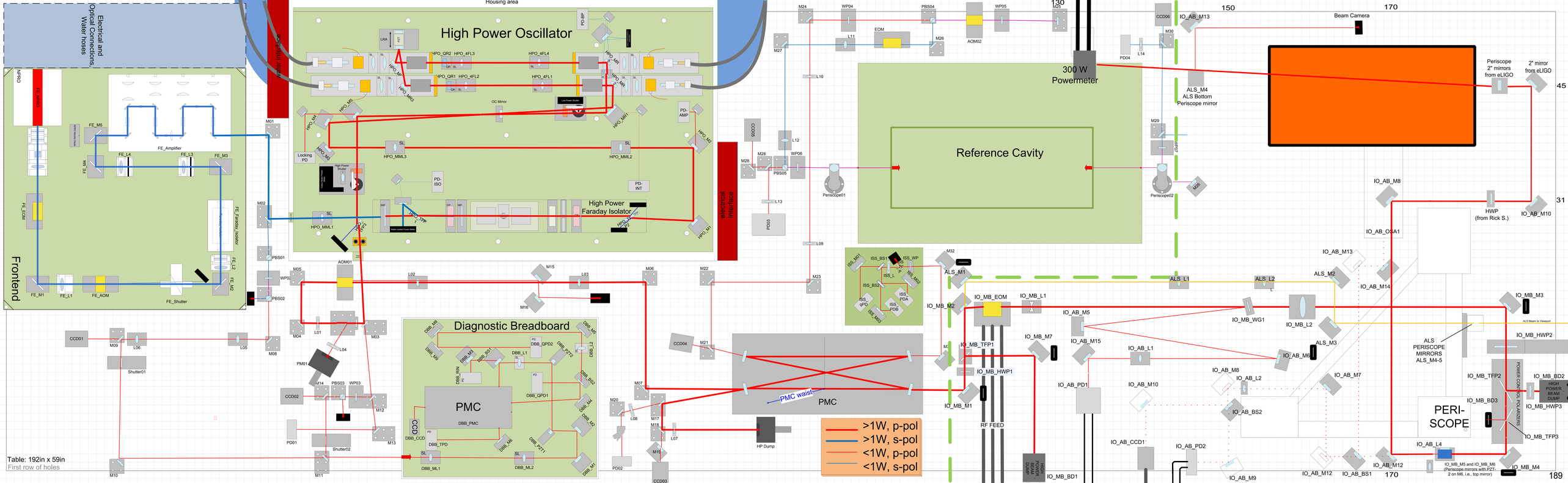
Housing area
Electrical and Optical Connections, Water hoses
Water interface
electrical interface
High Power Oscillator
High Power Faraday Isolator
Frontend
NPRO
FE_NPRO
FE_Amplifier
FE_M5
FE_L4
FE_L3
FE_M3
FE_M4
FE_EOM
FE_M1
FE_L1
FE_AOM
FE_Shutter
FE_M2
FE_L2
FE_Faraday_Isolator
Diagnostic Breadboard
PMC
DBB_PMC
DBB_CCD
DBB_TPD
DBB_ML1
DBB_ML2
DBB_QPD1
DBB_QPD2
DBB_PZT1
DBB_PZT2
DBB_L1
DBB_BS1
DBB_BS2
DBB_M1
DBB_M2
DBB_M3
DBB_M4
DBB_M5
DBB_M6
DBB_M7
DBB_M8
DBB_M9
DBB_M10
DBB_M11
DBB_M12
DBB_M13
DBB_M14
DBB_M15
DBB_M16
DBB_M17
DBB_M18
DBB_L2
DBB_L3
DBB_L4
DBB_L5
DBB_L6
DBB_L7
DBB_L8
DBB_L9
DBB_L10
DBB_L11
DBB_L12
DBB_L13
DBB_L14
DBB_L15
DBB_L16
DBB_L17
DBB_L18
DBB_L19
DBB_L20
DBB_L21
DBB_L22
DBB_L23
DBB_L24
DBB_L25
DBB_L26
DBB_L27
DBB_L28
DBB_L29
DBB_L30
DBB_L31
DBB_L32
DBB_L33
DBB_L34
DBB_L35
DBB_L36
DBB_L37
DBB_L38
DBB_L39
DBB_L40
DBB_L41