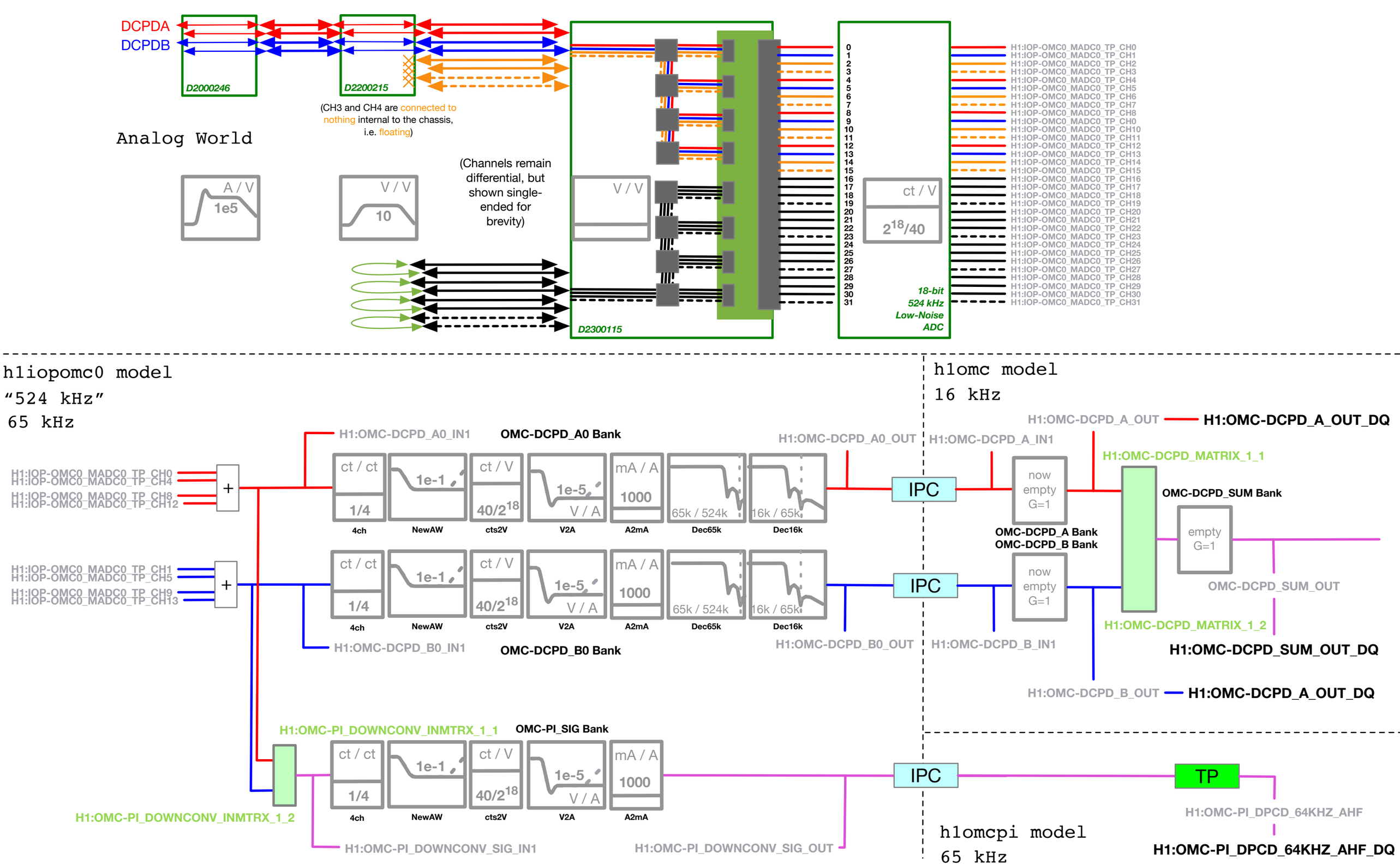
DCPDA
DCPDB
D2000246
D2200215
(CH3 and CH4 are connected to nothing internal to the chassis, i.e. floating)
Analog World
A / V
1e5
V / V
10
(Channels remain differential, but shown single-ended for brevity)
V / V
D2300115
ct / V
2^18/40
18-bit
524 kHz
Low-Noise
ADC
H1:IOP-OMC0_MADC0_TP_CH0
H1:IOP-OMC0_MADC0_TP_CH1
H1:IOP-OMC0_MADC0_TP_CH2
H1:IOP-OMC0_MADC0_TP_CH3
H1:IOP-OMC0_MADC0_TP_CH4
H1:IOP-OMC0_MADC0_TP_CH5
H1:IOP-OMC0_MADC0_TP_CH6
H1:IOP-OMC0_MADC0_TP_CH7
H1:IOP-OMC0_MADC0_TP_CH8
H1:IOP-OMC0_MADC0_TP_CH0
H1:IOP-OMC0_MADC0_TP_CH10
H1:IOP-OMC0_MADC0_TP_CH11
H1:IOP-OMC0_MADC0_TP_CH12
H1:IOP-OMC0_MADC0_TP_CH13
H1:IOP-OMC0_MADC0_TP_CH14
H1:IOP-OMC0_MADC0_TP_CH15
H1:IOP-OMC0_MADC0_TP_CH16
H1:IOP-OMC0_MADC0_TP_CH17
H1:IOP-OMC0_MADC0_TP_CH18
H1:IOP-OMC0_MADC0_TP_CH19
H1:IOP-OMC0_MADC0_TP_CH20
H1:IOP-OMC0_MADC0_TP_CH21
H1:IOP-OMC0_MADC0_TP_CH22
H1:IOP-OMC0_MADC0_TP_CH23
H1:IOP-OMC0_MADC0_TP_CH24
H1:IOP-OMC0_MADC0_TP_CH25
H1:IOP-OMC0_MADC0_TP_CH26
H1:IOP-OMC0_MADC0_TP_CH27
H1:IOP-OMC0_MADC0_TP_CH28
H1:IOP-OMC0_MADC0_TP_CH29
H1:IOP-OMC0_MADC0_TP_CH30
H1:IOP-OMC0_MADC0_TP_CH31
h1iopomc0 model
“524 kHz”
65 kHz
h1omc model
16 kHz
H1:OMC-DCPD_A_OUT
H1:OMC-DCPD_A_OUT_DQ
H1:OMC-DCPD_A0_IN1
OMC-DCPD_A0 Bank
H1:OMC-DCPD_A0_OUT
H1:OMC-DCPD_A_IN1
H1:OMC-DCPD_MATRIX_1_1
OMC-DCPD_SUM Bank
H1:IOP-OMC0_MADC0_TP_CH0
H1:IOP-OMC0_MADC0_TP_CH4
H1:IOP-OMC0_MADC0_TP_CH8
H1:IOP-OMC0_MADC0_TP_CH12
+
ct / ct
1/4
4ch
1e-1
NewAW
ct / V
40/2^18
cts2V
1e-5
V / A
V2A
mA / A
1000
A2mA
65k / 524k
Dec65k
16k / 65k
Dec16k
IPC
now
empty
G=1
OMC-DCPD_A Bank
OMC-DCPD_B Bank
empty
G=1
OMC-DCPD_SUM_OUT
H1:OMC-DCPD_MATRIX_1_2
H1:OMC-DCPD_SUM_OUT_DQ
H1:IOP-OMC0_MADC0_TP_CH1
H1:IOP-OMC0_MADC0_TP_CH5
H1:IOP-OMC0_MADC0_TP_CH9
H1:IOP-OMC0_MADC0_TP_CH13
H1:OMC-DCPD_B0_IN1
OMC-DCPD_B0 Bank
H1:OMC-DCPD_B0_OUT
H1:OMC-DCPD_B_IN1
H1:OMC-DCPD_B_OUT
H1:OMC-DCPD_A_OUT_DQ
H1:OMC-PI_DOWNCONV_INMTRX_1_1
OMC-PI_SIG Bank
H1:OMC-PI_DOWNCONV_INMTRX_1_2
H1:OMC-PI_DOWNCONV_SIG_IN1
H1:OMC-PI_DOWNCONV_SIG_OUT
TP
H1:OMC-PI_DPCD_64KHZ_AHF
H1:OMC-PI_DPCD_64KHZ_AHF_DQ
h1omcpi model
65 kHz