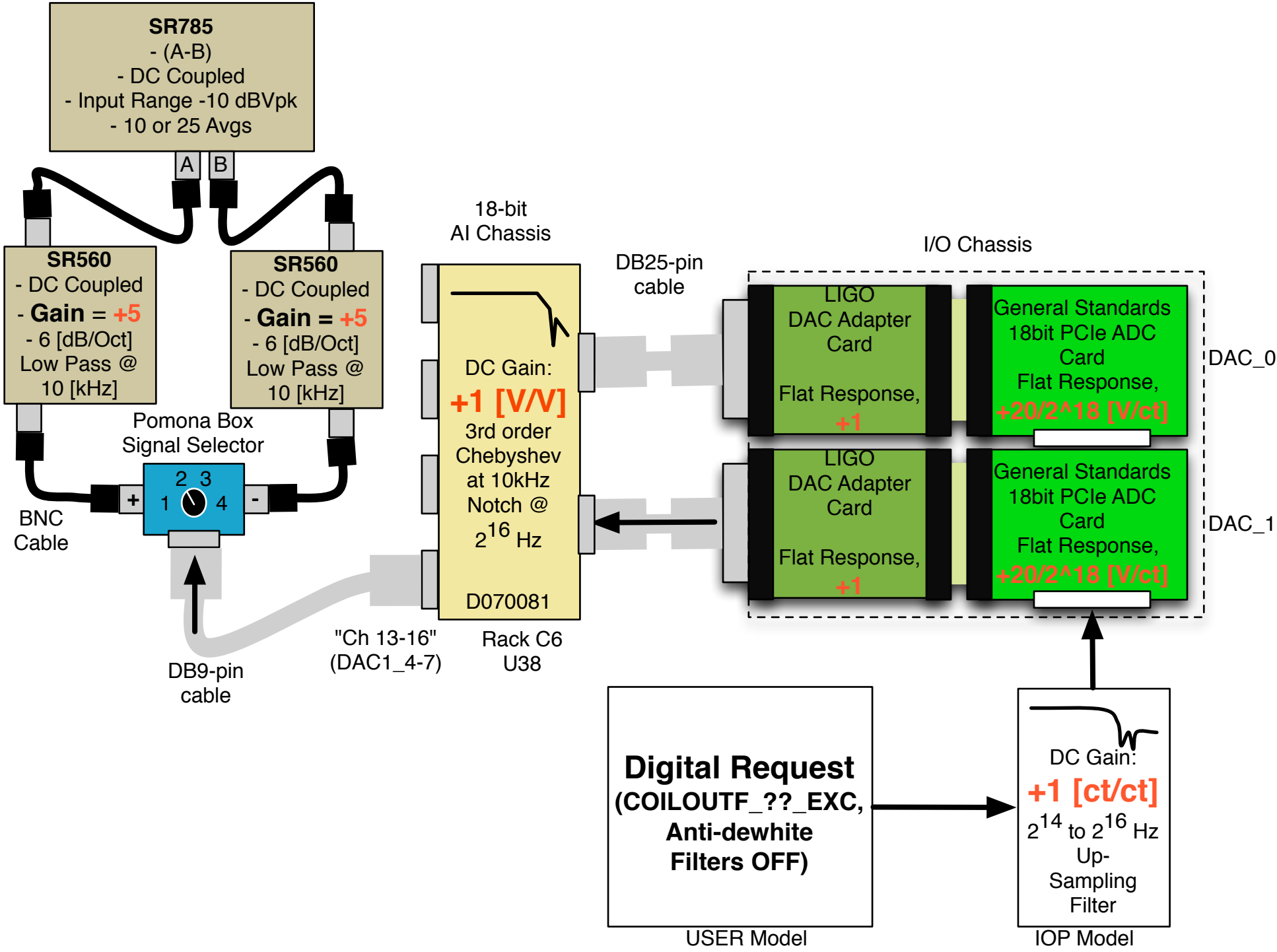
SR785
- (A-B)
- DC Coupled
- Input Range -10 dBVpk
- 10 or 25 Avgs
A
B
SR560
- DC Coupled
- Gain = +5
- 6 [dB/Oct]
Low Pass @
10 [kHz]
SR560
- DC Coupled
- Gain = +5
- 6 [dB/Oct]
Low Pass @
10 [kHz]
Pomona Box
Signal Selector
2 3
1 4
+
-
BNC
Cable
DB9-pin
cable
18-bit
AI Chassis
DC Gain:
+1 [V/V]
3rd order
Chebyshev
at 10kHz
Notch @
2^{16} Hz
D070081
"Ch 13-16"
(DAC1_4-7)
Rack C6
U38
DB25-pin
cable
I/O Chassis
LIGO
DAC Adapter
Card
Flat Response,
+1
General Standards
18bit PCIe ADC
Card
Flat Response,
+20/2^18 [V/ct]
DAC_0
LIGO
DAC Adapter
Card
Flat Response,
+1
General Standards
18bit PCIe ADC
Card
Flat Response,
+20/2^18 [V/ct]
DAC_1
Digital Request
(COILOUTF_??_EXC,
Anti-dewhite
Filters OFF)
USER Model
DC Gain:
+1 [ct/ct]
2^{14} to 2^{16} Hz
Up-
Sampling
Filter
IOP Model